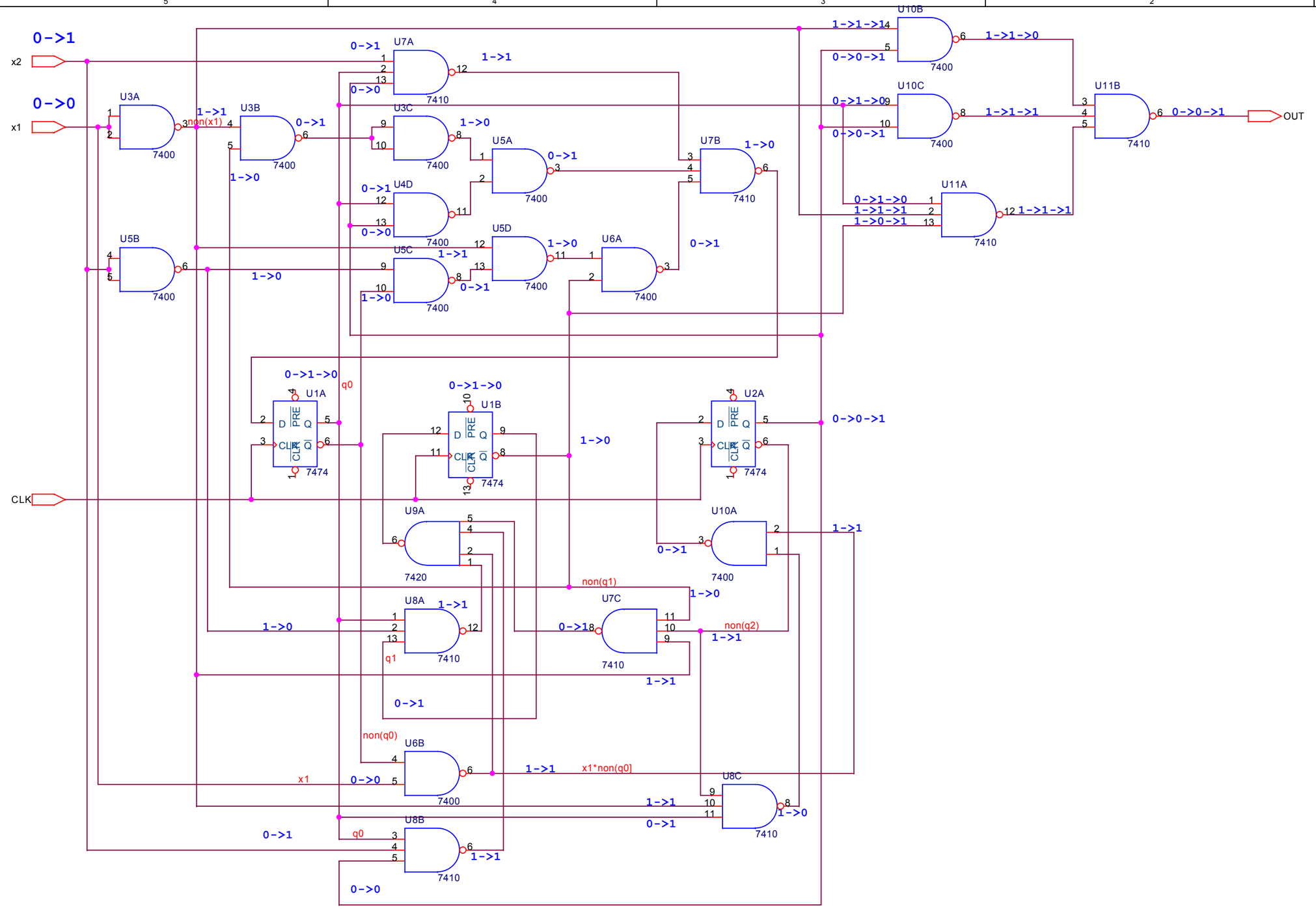

Title <Title>		
Size B	Document Number <Doc>	Rev <RevCod
Date: Sunday, December 19, 2004	Sheet 1 of 1	